7/26/2026

# S125r

# Basketball Unit

Installation, Operation &
Maintenance Manual

**PLAY HARD SPORTS EQUIPMENT**
13 Alex Fisher Drive
Burleigh Heads, QLD 4220

# Contents

Introduction..... 2
Product Details: ..... 2
Safety Information for the Installer: ..... 5
Important Safety Information ..... 5
Assembly Precautions ..... 5
Site Specific Precautions:..... 5
Component List ..... 6
Footing Details ..... 8
1. S125r Footing Details ..... 8
Installation Instructions: ..... 9
Operating Instructions..... 12
Maintenance:..... 13
Safety Guidelines (Usage) ..... 13
Certificate of Compliance:..... 14
Warranty Certificate:..... 15

# Introduction

Thank you for choosing the S125r Rotating Basketball/Netball System from Play Hard Sports Equipment Australia. Our Basketball Towers are designed for durability and performance and are suitable for commercial use.

This manual provides detailed information on the installation, maintenance, usage, and warranty details of the S125r Rotating Basketball/Netball Tower supplied by Play Hard Sports Equipment Australia.

## Product Details:

Play Hard Sports Equipment designs and manufactures S125r Rotating Basketball/Netball Towers using Structural-Grade Steel. The Pole and the Extension Arm are hot-dip galvanised as per Australian Standards, which offers a weather-resistant coating for long-lasting performance and stability. The tower has been load-tested, engineered, and certified by Structural Engineers.

S125r is designed to be used in Multi Sports Courts, where the Basketball size is 28m and the Netball court size is 30.5m. The main post sits on the netball court baseline and when rotated for basketball use, the extension arm will place the backboard 1.2M inside the basketball baseline. It has been designed for commercial spaces such as schools, public parks, and clubs with a full-size court and practice areas.

**Product Specifications:**

- **Models**:
  - S125r
  - S125r-BP
  - S125r (Sleeve)
- **Height**:
  **Standard Ring/Hoop Height**: 3.05 meters for both Basketball and Netball
- **Footing Option:**
  The tower is usually concreted directly into the ground.

  Options are available in a ground sleeve or base-plated with chemset anchor studs.
- **Footing Size:** 600 Diameter 1000mm Deep Bored Pier with N20 Concrete
- **Material**: 127 OD Pole and 150 x 100 RHS Extension Arm are made from Steel and then hot-dip galvanised after fabrication.
- **Basketball Ring**:
  - R11b/ProRim
  - OzRing
- **Netball Ring:**
  - NRa Ring

- **Net Tie System**: Patented Waverail system

- **Backboard**: Regulation Size 1800mm x 1050mm
  - B1810p: Polyboard Backboard
  - B1810a: Acrylic Backboard
  - B1810g: Glass Backboard

- **Color Options**: Standard Hot-Dip Galvanized. Various paint color options are available on request.

- **Padding Options**: BP150
  - 2.0m high x 360 mm round cylindrical foam
  - Vertical Velcro Seam at rear
  - Multiple colours are available, and your logo can be added too

Apart from our standard product range, we offer custom basketball towers based on site-specific requirements. Please contact our team for further details.

All our product footings have been engineered to be suitable for site soil classification as Class 'A", 'S' & 'M' per AS2870. Site-specific footing and slab engineering must be done for other Soil Classes. We also offer site-specific engineering drawings if required with additional charges.

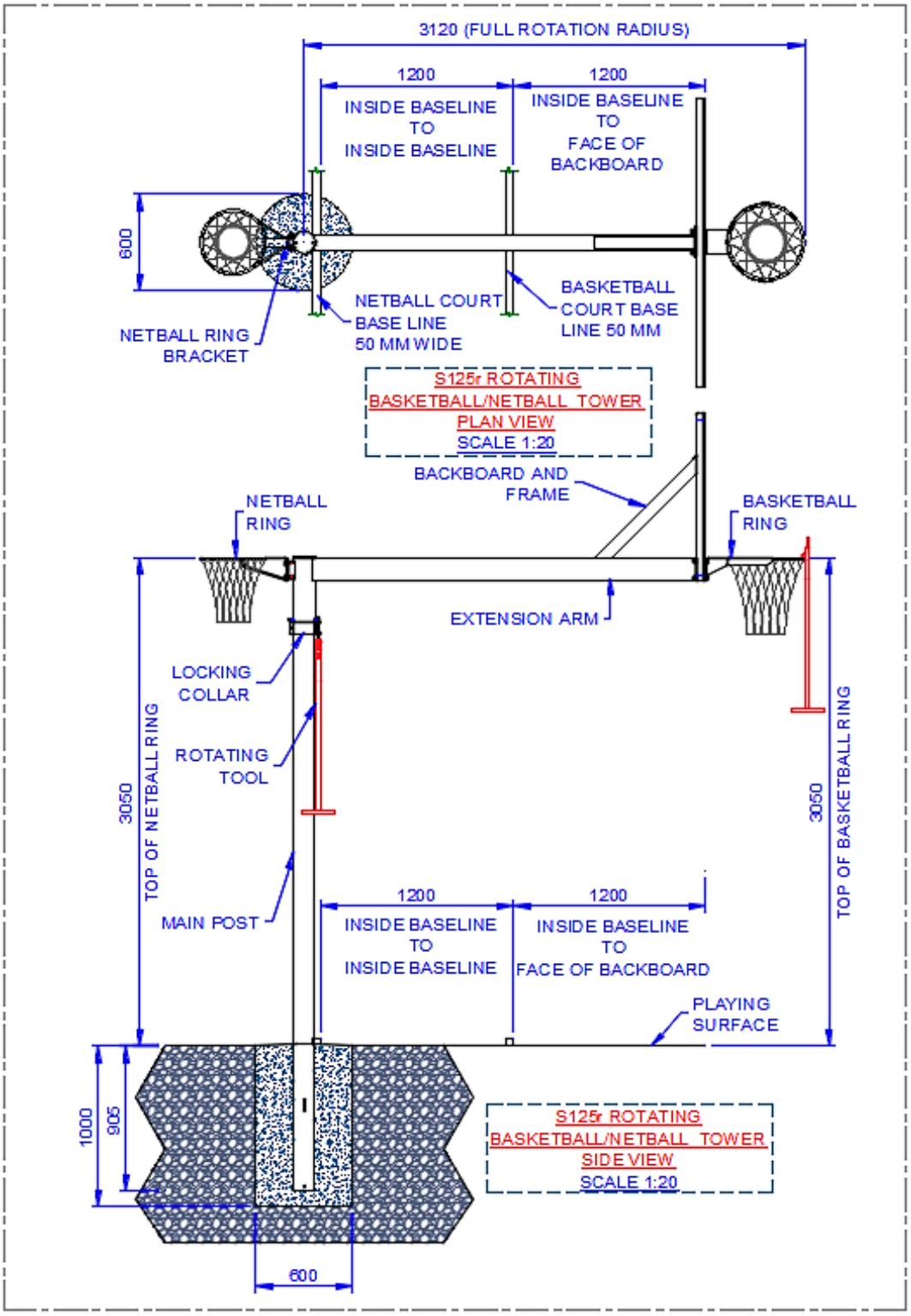


*Figure 1: S125r Rotating Basketball/Netball Tower*

# Safety Information for the Installer:

## Important Safety Information

- **Read the Manual**: Ensure you read this manual in full before beginning assembly or installation.
- **Supervision:** Children should be supervised around the tower location during and after installation.
- **Wear Safety Gear**: Always wear appropriate safety gear during assembly and installation.
- **Avoid Electrical Hazards:** Keep electrical tools away from the goalposts and ensure the work area is dry.

## Assembly Precautions

- **Two-Person Job:** Assembly requires at least two people to ensure safety and accuracy.
- **Check Parts:** Verify all parts are present and undamaged before starting assembly.
- **Level Ground:** Assemble on a flat surface to avoid instability.

## Site Specific Precautions:

- Before commencing any groundwork, please survey the ground/field for underground electrical, water, or sewage lines and check for overhead electrical lines.
- It is advised that the soil is tested to know its strength. All our Goalposts have been structurally designed to suit 'A', 'S' & 'M' Soils per AS2870. The contractors/installers must notify Play Hard Sports Equipment of any changes to the site specification. All other soil sites would require site-specific footing and slab engineering design.
- The concrete must be of a minimum 20 MPA, with a slump of 80 – 100 mm, and a maximum aggregate of size 20mm.
- Let the concrete set for at least 4 days before commencing further work.

# Component List

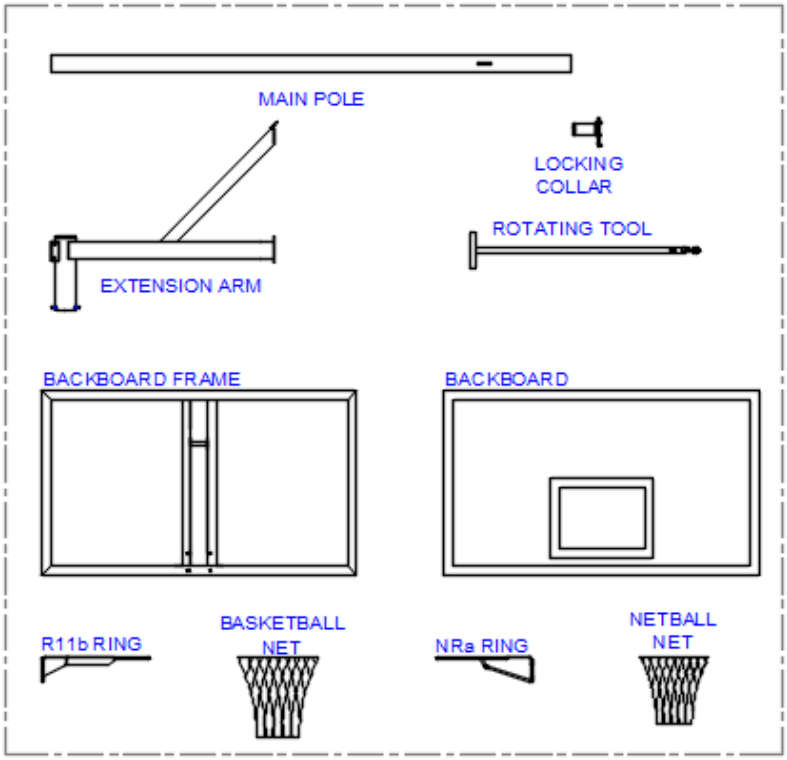


*Figure 2: S125r Rotating Basketball/Netball Tower Parts List*

| | Quantity per Tower | | |
|---|---|---|---|
| Components | S125r | S125r - BP | S125r (Sleeve) |
| Main Post (127 OD) | 1 | 1 | 1 |
| Extension Arm | 1 | 1 | 1 |
| Backboard Frame | 1 | 1 | 1 |
| Locking Collar | 1 | 1 | 1 |
| Basketball Ring | 1 | 1 | 1 |
| Netball Ring | 1 | 1 | 1 |
| SN90r/S125r Hand Tool | 1 | 1 | 1 |
| Ground Sleeve | 0 | 0 | 1 |
| Sleeve Cap | 0 | 0 | 1 |
| Bolt Kit | | | |

| | | | |
|---|---|---|---|
| M10 x 90mm Gal Hex Bolt, Spring Washer, Double Flat Washer & Nut | 4 | 4 | 4 |
| M10 x 30mm Gal Hex Bolt, Spring Washer, Flat Washer & Nut | 2 | 2 | 2 |
| M16 Threaded Rods or Chemset Reo 502 with levelling Nut and Washer<br>(Not Included in the Package) | 0 | 8 | 0 |

Note: Locking Collar and bolt kits are packed inside the ring box. Please check your order. If any parts are missing, please call us immediately

# Footing Details

## 1. S125r Footing Details

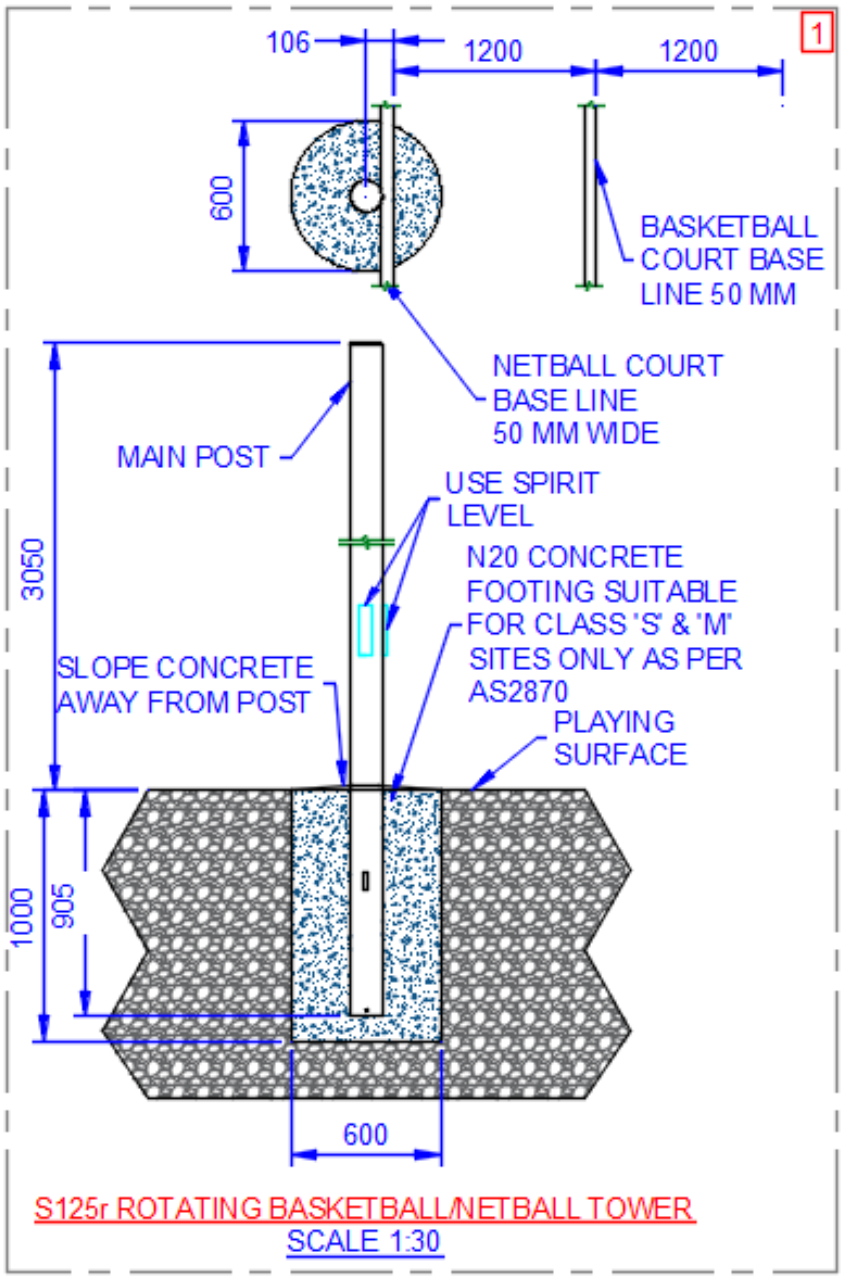


*Figure 3: S125r Footing Detail*

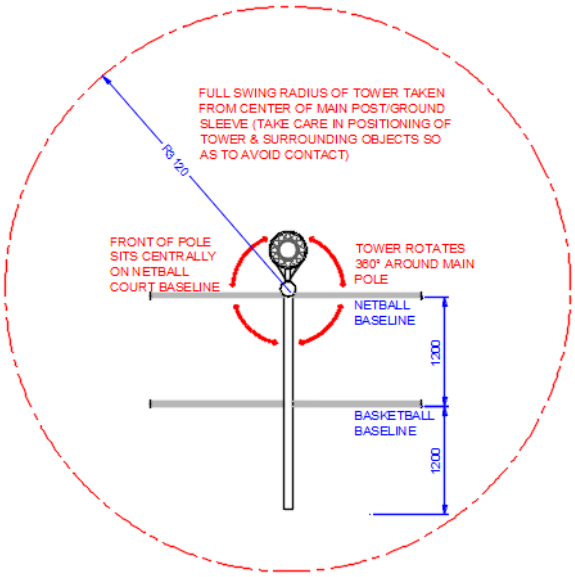


*Figure 4: S125r Full Rotation Space Requirement*

## Installation Instructions:

### 1A. Site Preparation:

- Before commencing any groundwork, please survey the ground/field for any underground electrical line, water line and sewage line. Also, check for any overhead electrical lines.
- It is advised that the soil is tested to know its strength. All our towers have been structurally designed to suit 'A', 'S' & 'M' Soils per AS2870. The contractors/installers must notify Play Hard Sports Equipment of any changes to the site specification. All other soil sites would require site-specific footing and slab engineering design.
- Ensure there is a space of 3120 mm around the proposed hole location so that the extension arm with the board can rotate.

### 1B. Post Installation:

A. SN90r Concreted to the ground:

- Bore Drill a 600 mm Diameter and 1000 mm Deep Hole.
- If the Ground Level at the hole position is lower than the playing surface, then box up around the hole site to achieve the concrete depth of 1000mm. (*Please be mindful that only 100mm of box-up is acceptable*)
- Insert the main post into the hole and ensure it is centred, correctly oriented and at a correct distance from the basketball court.
  - *Please refer to Figure 3 for further details. The post must be installed in a specific orientation as shown in the Figure and it is the Installer/Contractor responsible for ensuring that.*
- Pour the concrete into the hole. (*Prevent any concrete from getting inside the post)*
- Ensure the post is fixed at 3050mm above the ground level while pouring the concrete into the hole.

- The concrete must be of a minimum 20 MPA, with a slump of 80 – 100 mm, and a maximum aggregate of size 20mm.
- Trowel the concrete sloping away from the pole to prevent water from pooling around the post base.
- While the concrete mix is still fresh, use a spirit level to check that the post is level in all axes.
- Let the concrete set for at least 4 days before commencing further work.

## 2. Attaching Extension Arm:

Once the concrete is set.

- Insert the locking collar into the post. *This is critical before attaching the extension arm.*
- Then, mount the extension arm onto the post as shown.
- Correctly align the arm to the court, slide the collar up so the locking pin sits between the locking bracket and tighten the bolt in the collar to secure.

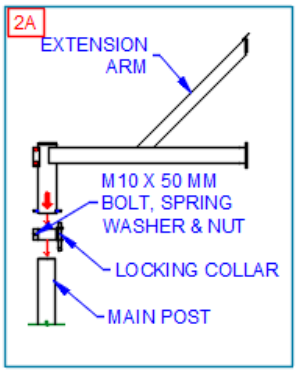


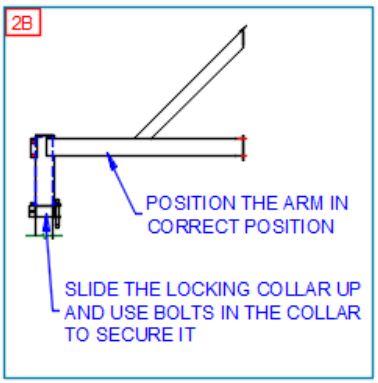


## 3. Attaching the Backboard:

- To attach the backboard, hang the frame via an angled bracket at the back end of the frame on top of the bracket at the extension arm.

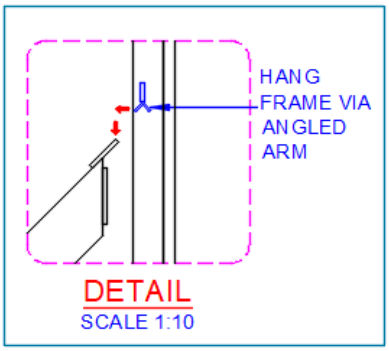


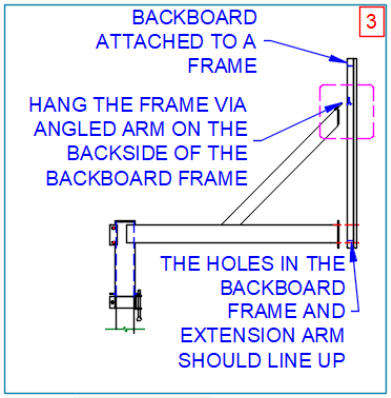

4. **Attaching the Basketball Ring:**
   - Align the bolt holes in the backboard, the extension arm and the ring and insert the M10 x 90mm Gal Hex Bolt, Double Flat Washer, Spring Washer and Nut without damaging the thread.
   - Run all the nuts up the bolt shaft until finger tight and use wrenches to tighten the bolts to achieve a snug fit.

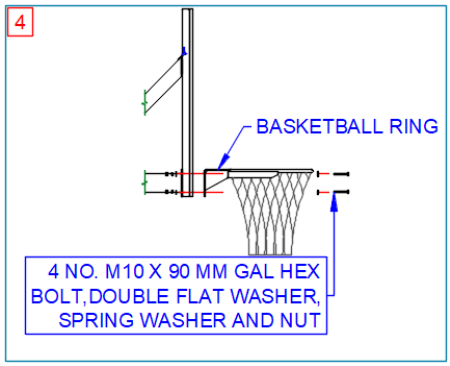


5. **Attaching the Netball Ring:**
   - Attach the netball ring to the bracket at the end of the extension arm using M10 x 30mm Gal Bolt, Flat Washer and Nyloc Nut.

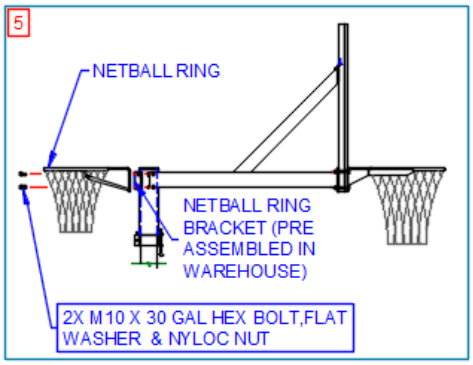


*Note: Use anti-seize lubricants on all bolts during the installation process.*

## Operating Instructions

The rotating basketball/netball system is easy to operate. We can use the supplied hand to position the tower for either basketball or netball.

**Step 1:** Release (by pulling the bolt down and turning 90 degrees) the spring-loaded head releasing the bolt with the supplied hand tool as shown in Figure 5.

*Figure 5: Step 1*

**Step 2:** Move around to the basketball ring, position the hand tool (Hook end) over the ring and easily walk (rotate) the tower head around, enabling the netball ring to lock securely into place as shown in Figure 6 below.

*Figure 6: Step 2*

**Step 3:** Once rotated 180 degrees, the spring-loaded head bolt will automatically engage. For safety, always check the head is accurately locked into place with the hand tool.

*Note: Please store the hand tool in a safe place and must be operated by a responsible person only*

*Figure 7: Step 3*

## Maintenance:

All our towers are designed to require a minimal level of maintenance. However, it is advisable to do:

- **Regular Inspections**: Check for any signs of wear or damage. Tighten bolts and replace nets or padding as needed.
- **Cleaning**: Clean the posts with a damp cloth to remove dirt. Avoid harsh chemicals that could damage the paint. If the poles have been scratched over the intended period of use, lightly scuff the area and apply 2 coats of zinc-rich primer.
- **Weather Protection**: Consider using protective covers during extreme weather to extend the lifespan of the equipment.

## Safety Guidelines (Usage)

The owner of this equipment is responsible for ensuring all players are aware of these conditions for the safe use and operation of the equipment.

1. **Padding:**
   - Ensure padding is securely attached to reduce injury risk.
2. **Supervision:**
   - Supervise play, especially with younger players, to ensure safety.
   - Prevent players from hanging from the ring or climbing up the posts to prevent serious injury.
   - Care must be taken while operating the hand tool to rotate the tower.
3. **Height Adjustment:**
   - If there is an option for a height-adjusting frame, care must be taken while operating the height-adjusting frame mechanism.
4. During visual inspection, if the bolts are loosened or the post or footing is damaged, the basketball system should not be used until repaired.

## Certificate of Compliance:

All our products have been structurally designed and are made using structural-grade steel. All the workmanship is completed following the relevant Australian Standards. Our Products comply with the following Australian Standards.

1. AS/NZS 4100:1998 Steel Structures
2. AS/NZS 1554.1:2014 Welding of steel structures
3. AS/NZS 1664 Aluminium structures
4. AS/NZS 1665:2004 Welding of aluminium structures
5. AS/NZS 1170.0 Structural design actions – General principles
6. AS/NZS 1170.2 Structural design actions – Wind actions
7. AS/NZS 2312.1:2017 Guide to the protection of structural steel against atmospheric corrosion by the use of protective coatings
8. AS/NZS 2311:2017 Guide to the paintings of buildings
9. AS/NZS 4680:2006 Hot-dip galvanized (Zinc) coatings on fabricated ferrous articles

All our Basketball Towers meet the QLD Education specifications for basketball equipment. April 2023. All our towers have been load and cycle tested according to those specifications, which are the most stringent tests required in any State in Australia

All our products are designed and manufactured here in Australia.

AUSTRALIAN MADE

## Warranty Certificate:

*When you purchase a Play Hard Sports Equipment product you have the peace of mind in knowing that your product is covered by Play Hard Sports Equipment's manufacturer's warranty against faulty workmanship and materials.*

*The Basketball Tower Structure (Pole, arm, and structural components) have 25 years of warranty. The Backboard has a 10-year warranty, the ProRim Ring has a 25-year warranty, the OzRing has a 10-year warranty and the padding if supplied has a 2-year warranty, and the net has a 1-year warranty.*

*The warranty covers damage or failure of the product during normal intended use. The warranty does not include damage to the product resulting from accident, misuse, improper installation, operation, or unauthorised repair or alteration.*

*Products manufactured for home use are not guaranteed for use in commercial applications.*

*A visual check of the Tower should be conducted once a month to ensure the highest level of product performance and care.*

*If the product should become defective within the warranty period, please get in touch with Play Hard Sports Equipment customer service:*

13 Alex Fisher Drive
Burleigh Heads QLD 4220
Ph: (07) 55934494
Email: email@playhardsports.com.au